ISSUE:	DRAWN BY:	CHECKED BY:	CRF NO:	DATE:	DESCRIPTION:
a	CH	KB	1333	23/08/16	
b	KB	CH	1362	24/11/16	Add PS210 to instruction visuals
c	AH	KB	1614	26/10/17	Max load graphic increased from 50kg to 75kg

LA038 x 1
Printed Label, Kit Box

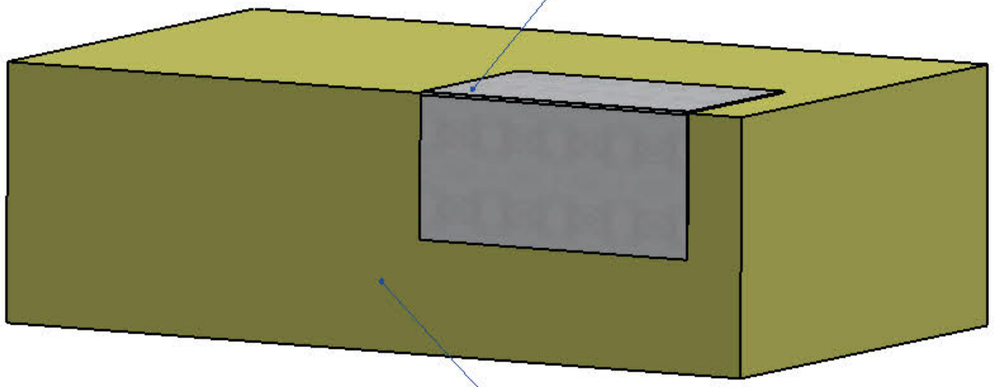

PA201 x 1
Aluminium Bar Fitting Kit Box

RPI001EU x 1
Rhino Products Information Sheet

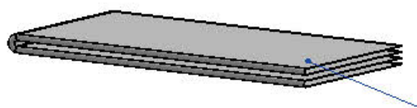

INJC2K x 1
Customer Instruction Sheet(s)

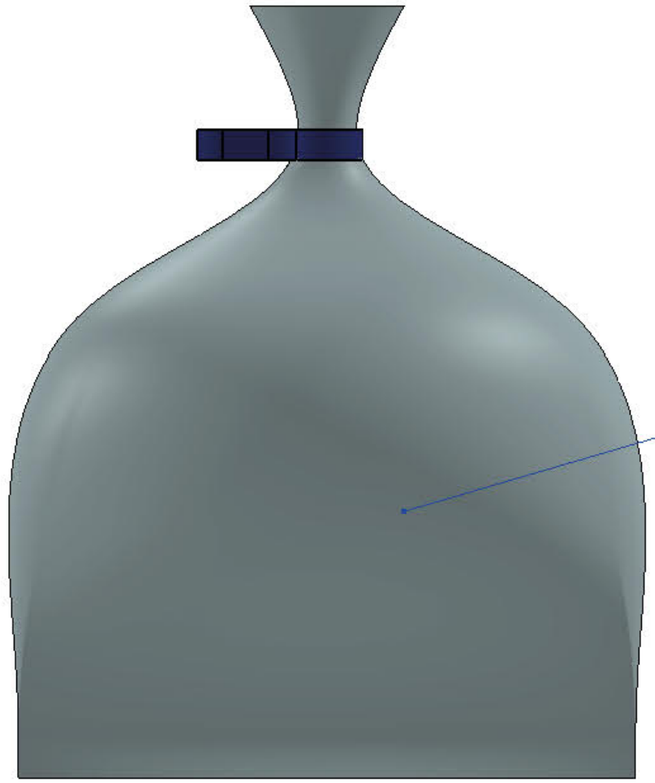

FK904 x 1
Leg fixing kit for JC2K

PS252 x 4
2016- Expert Outer Base Pad - Aluminium Bar

THIRD ANGLE PROJECTION

UNLESS OTHERWISE SPECIFIED:
DIMENSIONS ARE IN MM
0.00 ±0.2
0.0 ±0.5
ANG ±0.5 °
DERIVED DIMENSIONS SHOWN IN BRACKETS

DEBURR AND BREAK ALL SHARP EDGES

SHEET SIZE A3 SHEET SCALE: 1:5

DRAWING NO:	DESCRIPTION:		DESIGNED BY:
JC2K (1of5)	"JC" 4 Leg Fitting Kit - Aluminium Bars		C. Horsefield 23/08/16
MATERIAL SIZE: n/a	MATERIAL SPEC: n/a	FINISH: n/a	WEIGHT: 0.44Kg

© NOTE: This drawing is the property of Rhino Products Ltd and must not be used or copied without written consent. The Rhino Products name and logo must remain clearly visible in any reproduction.

Frm No:076 Revision: B Date: 29/10/14

(1 : 1)

SA055 x 2

SA056 x 2

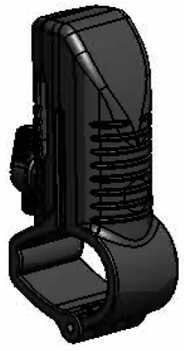

SA070 x 4

PS252 x 4

PS210 x 4

FS040(M6 x 35mm) x 4

FW008(M6) x 4

FW001(M6) x 4

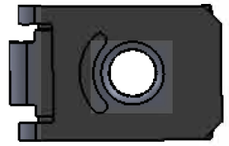

FN020(M6) x 4

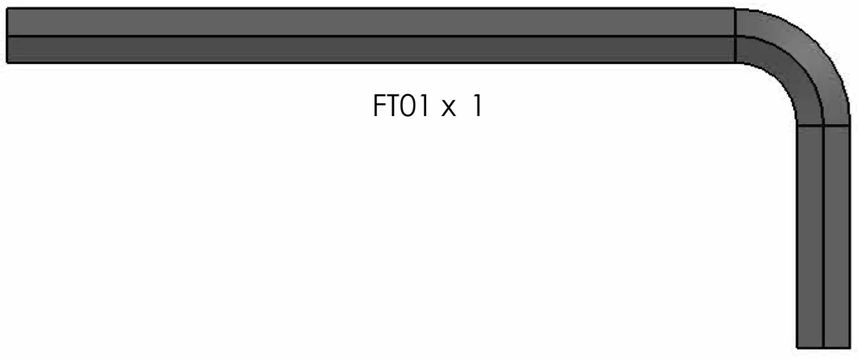

FT01 x 1

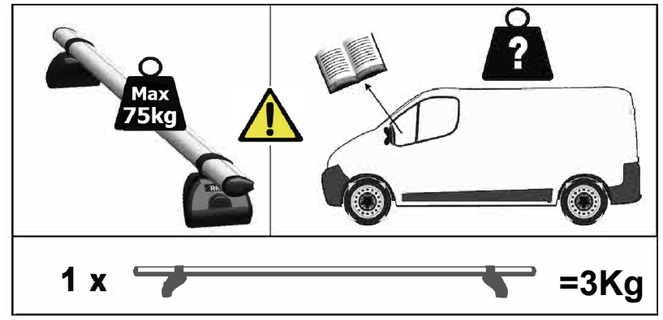

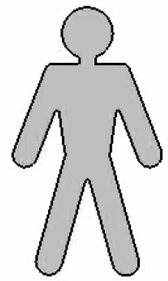

10mm x 1

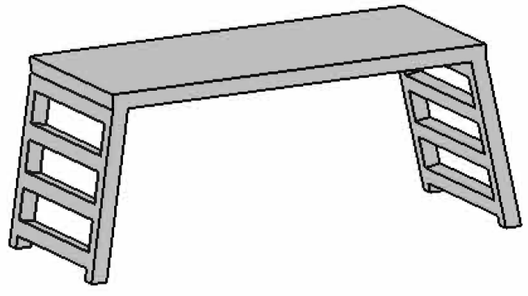

1.
Rhino

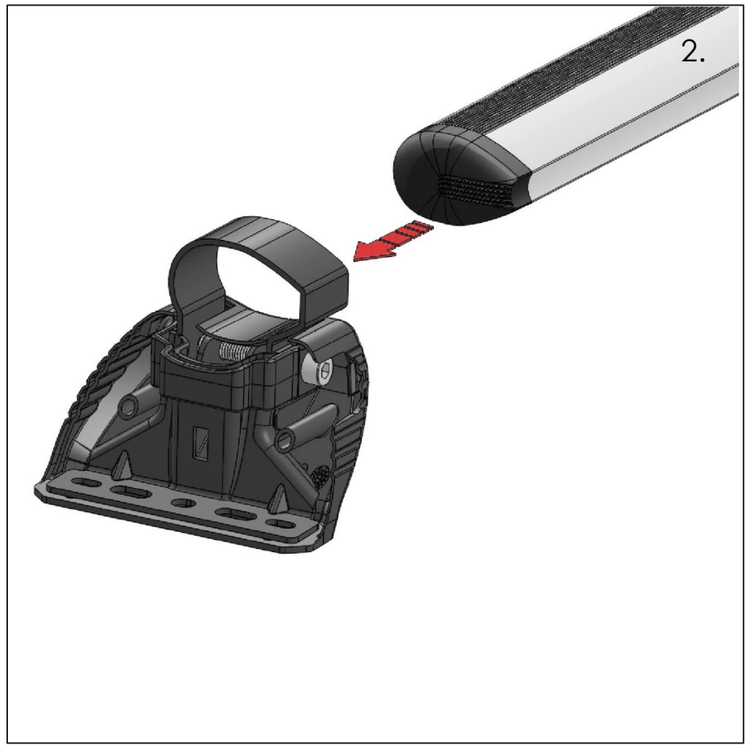
2.

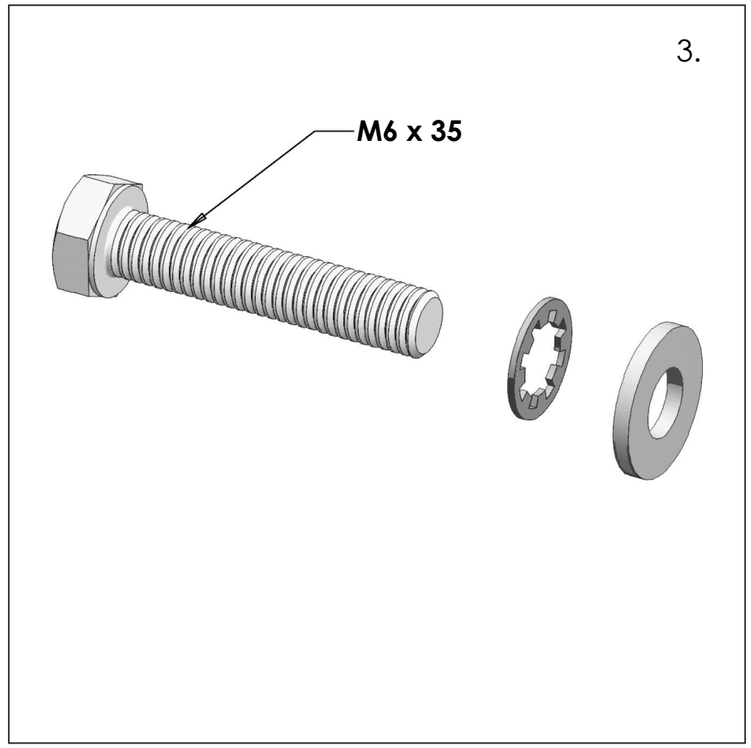
3.
M6 x 35

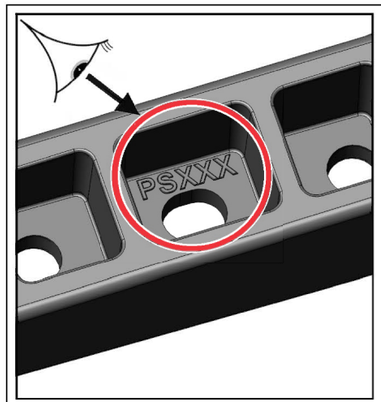
PSXXX

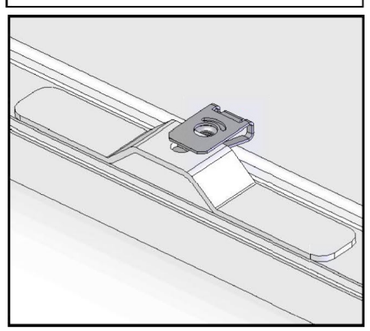

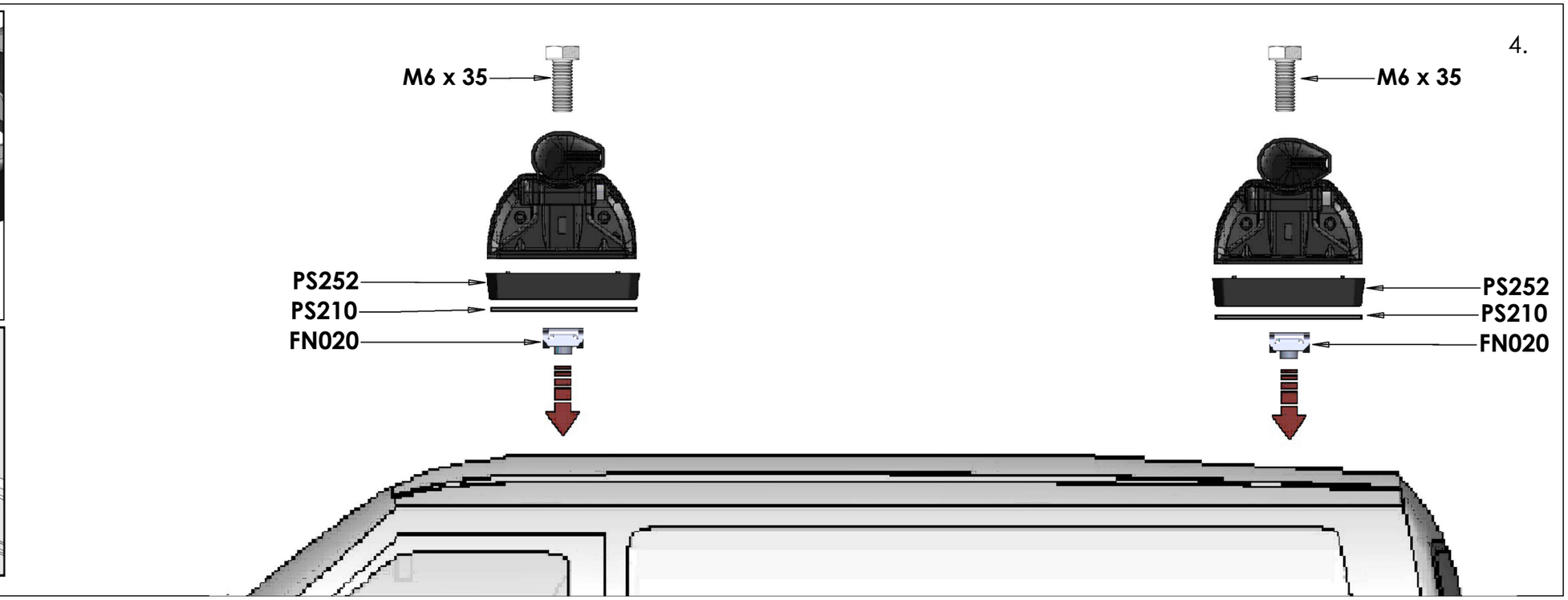
4.
M6 x 35
PS252
PS210
FN020
M6 x 35
PS252
PS210
FN020

5.

6.

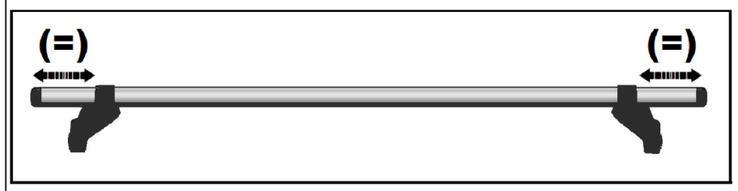

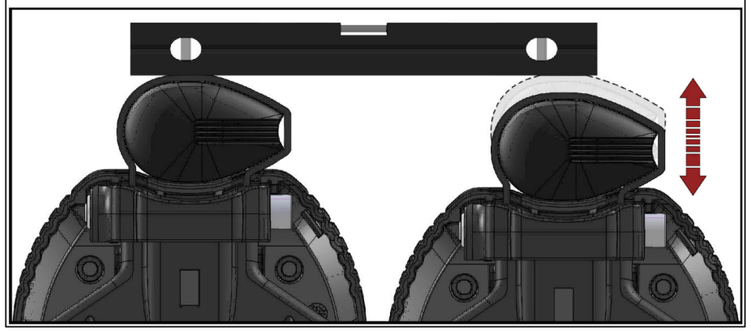

7.

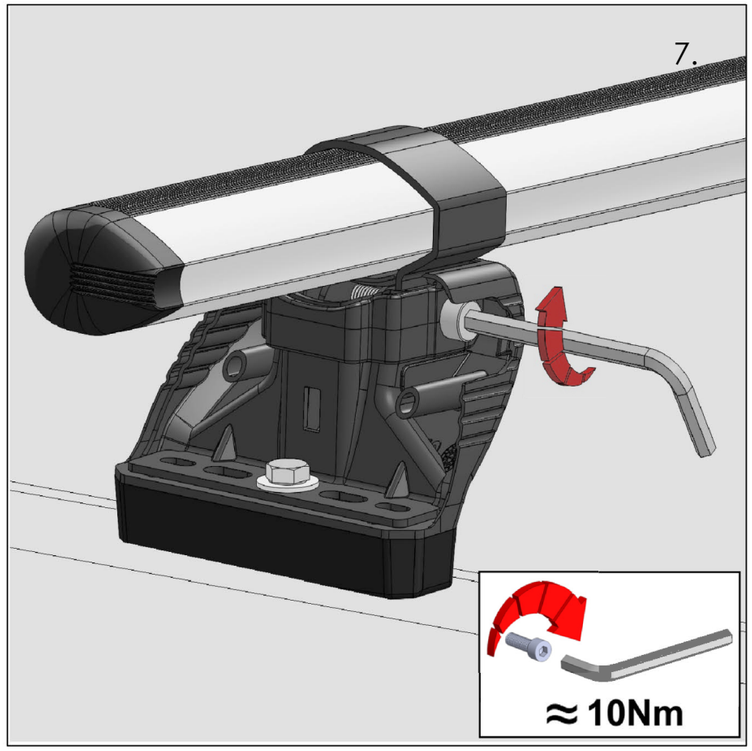

8.

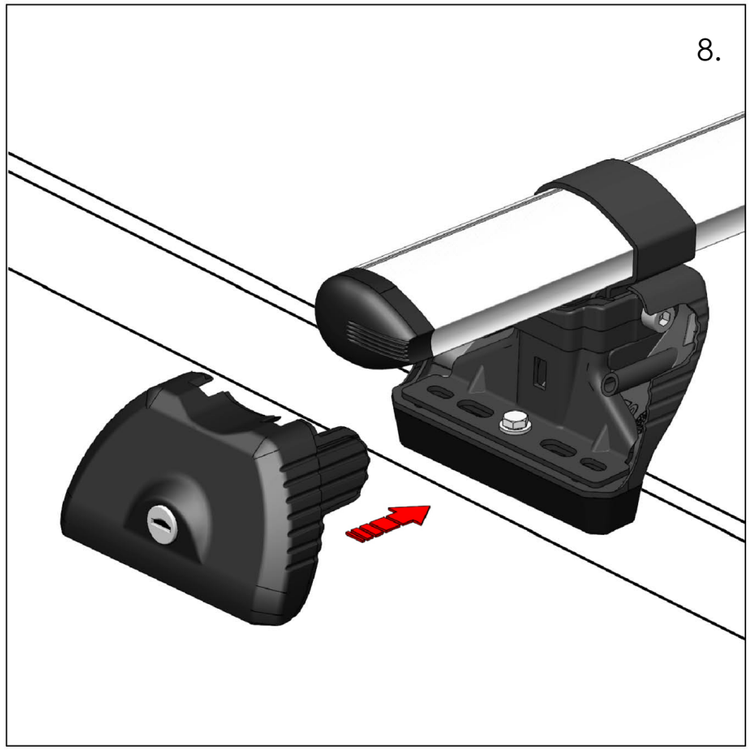

9.

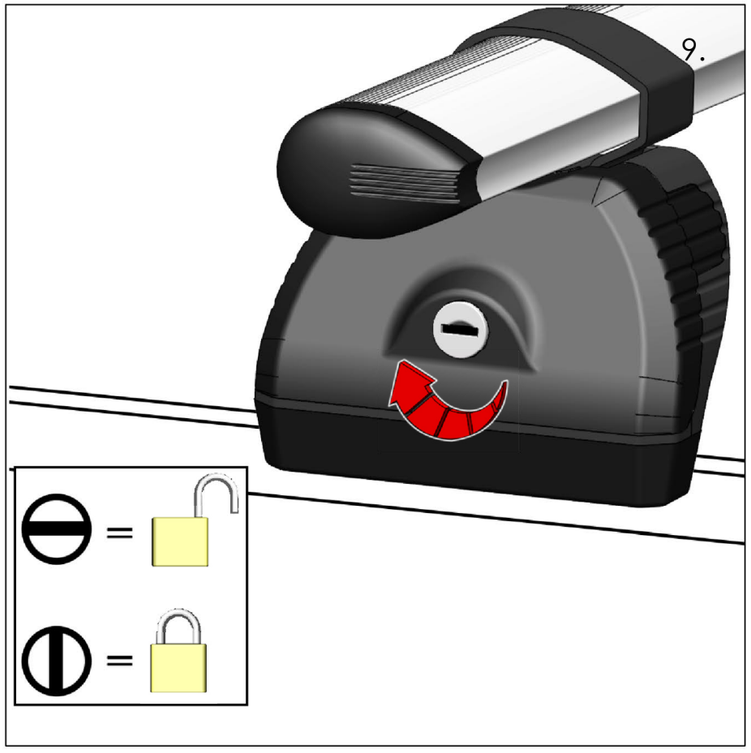

10.

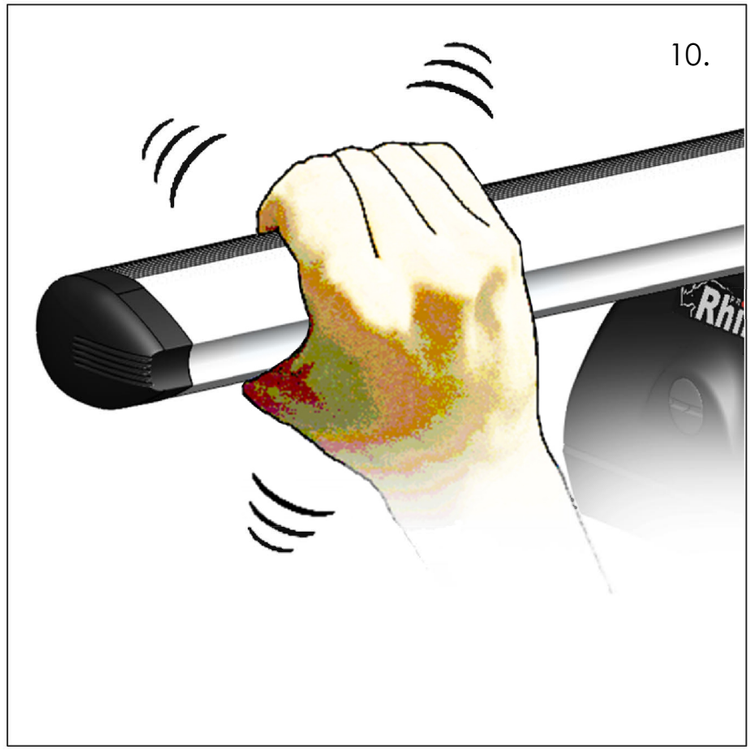

11.

12.

13.

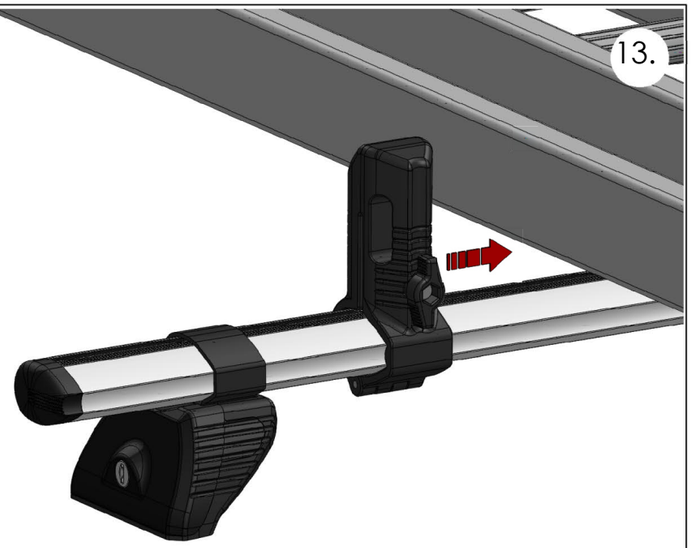

14.

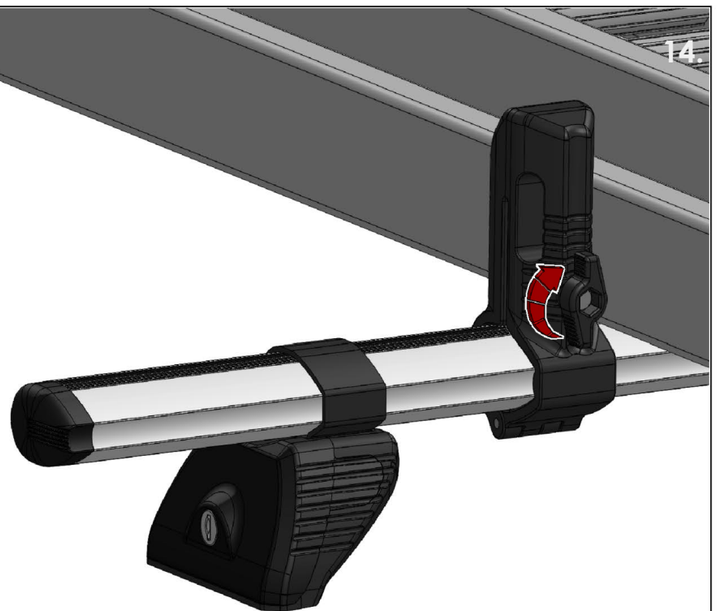
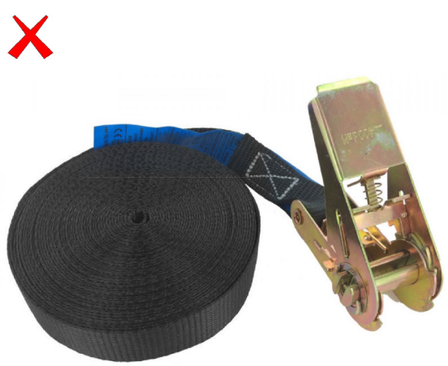
15.